abode

Axell handspray

Product Finish:	Stainless steel	Product code:	AT1107
		EAN13 barcode:	5060048380880

Note: the image shown may not reflect the product finish, chrome finish is typically depicted.

Product features:

- 304 grade brushed stainless steel construction
- Custom designed for lower to mid pressures
- Connects to any water supply, works independently of the tap
- Single spray pattern showerhead
- Grey nylon spout hose for stylish durability

Additional information / Parts included:

The installation of this product should respect requirment IRN R090.

Tap hole size min=28mm Recommended 35mm max = 45mm

Product dimensions:

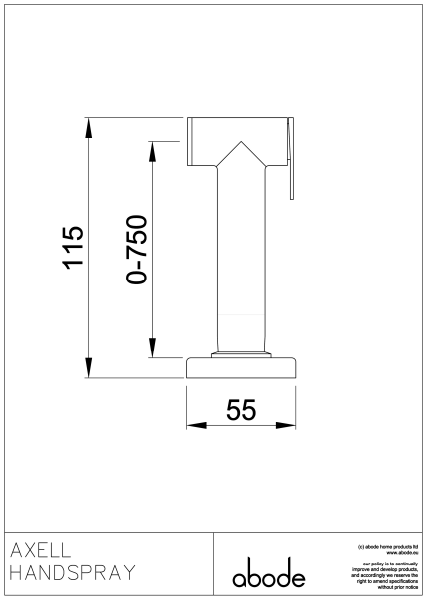

- **Overall Height / projection:** 115 mm
- **Exit reach:** 100-750 mm
- **Exit height:** 110 mm
- **Centre distance(s):**

- **Base diameter(s):** 55 mm
- **Recommended hole diameter:** Ø 35 mm
- **Max. surface depth:** 50 mm

- **Spout diameter:** n/a mm
- **Spout aerator size:** n/a

Packaged properties:

Box length: 240mm	**Box depth:** 75mm
Box width: 210mm	**Units per outer:** 10
Tap only weight: 0.24kg	**Boxed weight:** 0.94kg

Product flow characteristics:

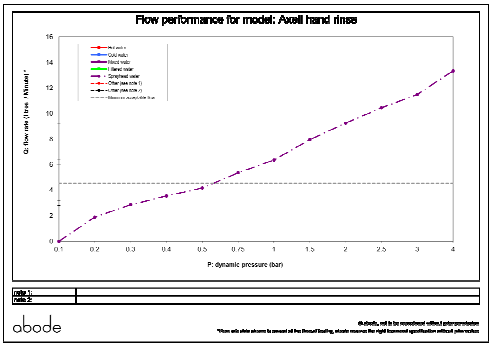

- **Min / Max water pressure:** 0.50 / 2 bar
- **Recommended / Max water temperature:** 46°C / 70°C
- **Part G - Mixed flow rate at 3 bar (litres / min):** 11.49

- **Control valve type:** Trigger
- **Product flow characteristics:** Single flow
- **Non return valve(s):** 1 x NRV supplied

- **Aerator type:** Metal spray diffuser
- **Accepts revolve / spray areator:** No
- **Spout connection method:** N/a

- **Tail pipe inlet / outlet size:** M15 / 1/2" BSP Male
- **Inlet pipe type / length:** flexible stainless braided hose (swivel) / 1500

Care instructions summary:

- Clean the mixers and showers regularly as required, using soap, do not use any other cleaners.
- Regular cleaning will prevent the build-up of lime scale and dirt
- After cleaning rinse thoroughly with clean water to remove any cleaner residue
- Residues of sink & worktop cleaners can also cause damage, so rinse with clean water after using, avoid contact with any abrasives

Warranty Summary (Full details available on request):

- Materials and workmanship defects warranted for 5 years
- Valves and working parts warranted for 5 years
- Surface warranty defects warranted for 1 year
- O-rings, hoses & gaskets warranted for 1 year