Classic 60 Ceramic
Professional+ 60 Ceramic

User Guide

Installation & Service Instructions

RANGEmaster

U111326-03

Contents

1. Before You Start... 1

Installation and Maintenance 1
Peculiar smells 1
Ventilation 1
Personal Safety 1
Hob Care 2
Cooker Care 3
Cleaning 3
If a Fault Occurs 3

2. Cooker Overview 4

The Hob 4
The Ovens 8
Oven Accessories 8

3. Multifunction Modes 10

4. Clock 12

5. Cooking Tips 15

Tips on Cooking with the Timer 15
General Oven Tips 15

6. Cooking Table 16

7. Cleaning Your Cooker 17

Hob 17
Grill 18
Control Panel and Doors 18
Top Oven Door Panel 18
Ovens 18

8. Troubleshooting 21

9. Installation 22

Dear Installer 22
Safety Requirements and Regulations 22
Provision of Ventilation 22
Location of Cooker 22
Positioning the Cooker 23
Levelling the Cooker 23
Moving the Cooker 23
Anti-tilting kit 23
Electrical Connection 24
Adjusting the feet 25
Final Checks 25
Customer Care 25

10. Circuit Diagrams 26

11. Technical Data 27

1. Before You Start...

This User Guide covers a number of different models. Although some of the illustrations will look different to your particular model the functions will be the same. We hope the meaning is clear.

Your cooker should give you many years of trouble-free cooking if installed and operated correctly. It is important that you read this section before you start, particularly if you have not used a ceramic cooker before.

This appliance is designed for domestic cooking only. Using it for any other purpose could invalidate any warranty or liability claim. In particular, the oven should NOT be used for heating the kitchen – besides invalidating claims this wastes fuel and may overheat the control knobs.

Installation and Maintenance

In the UK the electrical installation should be in accordance with BS 7671. Otherwise, all installations must be in accordance with the relevant instructions in this booklet, with the relevant national and local regulations, and with the local electricity supply companies' requirements.

Set the clock to ensure that the ovens are functional – see the relevant section in this manual.

It is recommended that this appliance is serviced annually.

Only a qualified service engineer should service the cooker, and only approved spare parts should be used.

Always allow the cooker to cool and then switch it off at the mains before cleaning or carrying out any maintenance work, unless specified otherwise in this guide.

Stabilizing brackets must be installed in order to prevent tipping of the appliance.

Peculiar smells

When you first use your cooker it may give off a slight odour. This should stop after a little use.

Before using for the first time, make sure that all packing materials have been removed and then, to dispel manufacturing odours, turn the ovens to maximum temperature and run for 45 minutes.

Make sure the room is well ventilated to the outside (see 'Ventilation' below). People with respiratory or allergy problems should vacate the area for this brief period.

Ventilation

The use of a cooking appliance results in the production of heat and moisture in the room in which it is installed. Therefore, ensure that the kitchen is well ventilated: keep natural ventilation holes open or install a powered cooker hood that vents outside. If you have several hotplates on, or use the cooker for a long time, open a window or turn on an extractor fan.

Personal Safety

DO NOT modify this appliance.

This appliance is not intended for use by persons (including children) with reduced physical, sensory or mental capabilities, or lack of experience and knowledge, unless they have been given supervision or instruction concerning use of the appliance by a person responsible for their safety.

Children or infirm persons should be supervised to ensure that they do not play with the appliance.

CAUTION: A long term cooking process has to be supervised from time to time. A short term cooking process has to be supervised continuously.

Danger of fire: DO NOT store items on the cooking surfaces.

Accessible parts will become hot during use and will retain heat even after you have stopped cooking. Keep babies and children away from the cooker and never wear loose-fitting or hanging clothes while the appliance is in use.

DO NOT use a steam cleaner to clean the cooker.

Always be certain that the controls are in the OFF position when the oven is not in use, and before attempting to clean the cooker.

Take care when touching the marked cooking areas of the hob.

When the oven is on, DO NOT leave the oven door open for longer than necessary, otherwise the control knobs may become very hot.

While the oven door is open do not let children climb on the door or sit on it.

Always keep combustible materials, e.g. curtains, and flammable liquids a safe distance away from your cooker.

DO NOT spray aerosols in the vicinity of the cooker while it is on.

Use dry oven gloves when applicable – using damp gloves might result in steam burns when you touch a hot surface. Do not use a towel or other bulky cloth in place of a glove – it might catch fire if brought into contact with a hot surface.

NEVER operate the cooker with wet hands.

DO NOT use aluminium foil to cover shelves, linings or the oven roof.

NEVER heat unopened food containers. Pressure build up may make the containers burst and cause injury.

DO NOT use unstable saucepans. Always ensure that you position the handles away from the edge of the hotplate.

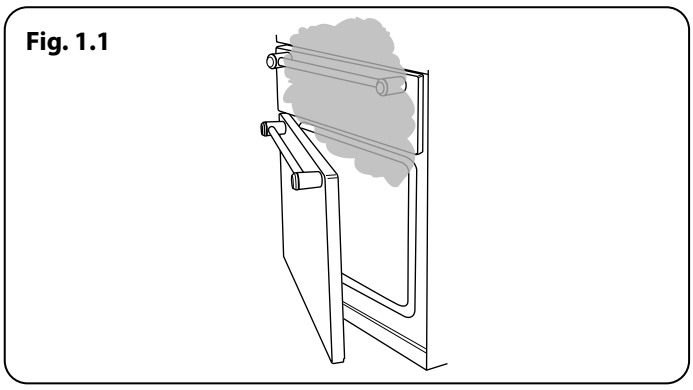

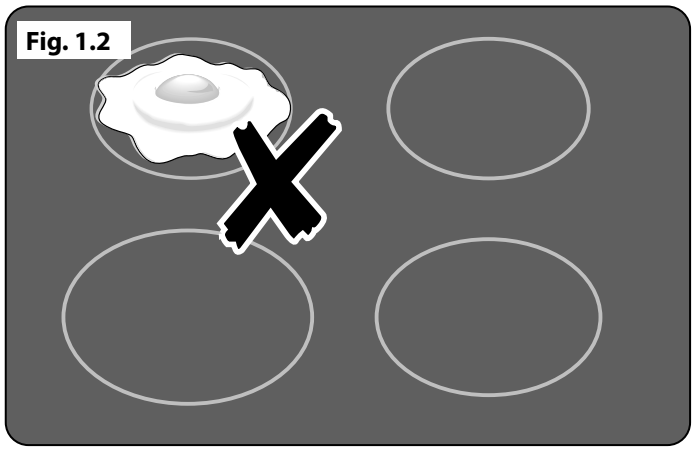

Make sure to use adequately sized pans with flat bottoms that are large enough to cover the surface of the hotplate heating area. Using undersized pans will expose a portion of the hotplate surface to direct contact and may result in the ignition of clothing.

Never leave the hotplate unattended at high heat settings. Pans boiling over can cause smoking, and greasy spills may catch on fire. Use a deep fat thermometer whenever possible to prevent fat overheating beyond the smoking point.

NEVER leave a chip pan unattended. Always heat fat slowly, and watch as it heats. Deep fry pans should be only one third full of fat. Filling the pan too full of fat can cause spill over when food is added. If you use a combination of oils or fats in frying, stir them together before heating, or as the fats melt.

Foods for frying should be as dry as possible. Frost on frozen foods or moisture on fresh foods can cause hot fat to bubble up and over the sides of the pan. Carefully watch for spills or overheating of foods when frying at high or medium high temperatures. Never try to move a pan of hot fat, especially a deep fat fryer. Wait until the fat is cool.

Do not use the top of the flue (the slot along the back of the cooker) for warming plates, dishes, drying tea towels or softening butter.

DO NOT use water on grease fires and never pick up a flaming pan. Turn off the controls and then smother a flaming pan on a surface unit by covering the pan completely with a well fitting lid or baking tray. If available, use a multipurpose dry chemical or foam-type fire extinguisher.

Cooking high moisture content foods can create a 'steam burst' when the oven door is opened. When opening the oven stand well back and allow any steam to disperse (**Fig. 1.1**).

Take care that no water seeps into the appliance.

Do not attempt to lift or move the appliance by pulling the door handles.

NEVER allow anyone to climb or stand on the hob.

The appliance is not intended to be operated by means of external timer or separated remote control system.

Hob Care

NEVER cook directly on the hob surface (Fig. 1.2).

DO NOT use the hob surface as a cutting board.

Do not leave utensils, foodstuffs or combustible items on the hob when it is not is use (e.g. tea towels, frying pans containing oil).

DO NOT place plastic or aluminium foil, or plastic containers, on the hob.

DO NOT leave the hob zones switched on unless being used for cooking.

Do not stand or rest heavy objects on the hob. Although the ceramic surface is very strong, a sharp blow or sharp falling object (e.g. a salt cellar) might cause the surface to crack or break (**Fig. 1.3**).

Should a crack appear in the surface, disconnect the appliance immediately from the supply and arrange for its repair.

Always **LIFT** pans off the hob. Sliding pans may cause marks and scratches (**Fig. 1.4**). Always turn the control to the OFF position before removing a pan.

DO NOT place anything between the base of the pan and the hob surface (e.g. asbestos mats, aluminium foil, Wok stand).

Avoid heating an empty pan. Doing so may damage both the hob and pan.

Only certain types of glass, glass-ceramic, earthenware or other glazed containers are suitable for hob cooking; others may break because of the sudden change in temperature.

Cooker Care

As steam can condense to water droplets on the cool outer trim of the oven, it may be necessary during cooking to wipe away any moisture with a soft cloth. This will also help to prevent soiling and discolouration of the oven exterior by cooking vapours (**Fig. 1.5**).

Cleaning

DO NOT use abrasive cleaners/pads, oven aerosols/ pads or stain removers on the surface.

In the interests of hygiene and safety, the cooker should be kept clean at all times as a build up in fats and other food stuff could result in a fire.

Clean only the parts listed in this guide.

We recommend that you avoid wiping any surface unit areas until they have cooled and the indicator light has gone off. Sugar spills are the exception to this (see 'Cleaning your Cooker'). After cleaning, use a dry cloth or paper towel to remove any cleaning cream residue.

The ceramic surface should be washed after use in order to prevent it from becoming scratched or dirty. However, you should clean the hob with caution as some cleaners can produce noxious fumes if applied to a hot surface.

Clean with caution. If a wet sponge or cloth is used to wipe spills on a hot surface, be careful to avoid steam burns. Some cleansers can produce noxious fumes if applied to a hot surface.

If a Fault Occurs

If your appliance develops a fault and you are unable to solve the problem, contact one of our service centres on the below numbers:

UK Service Centre Tel: 0844 847 6711.
Republic of Ireland Service Centre Tel: 051 302 333

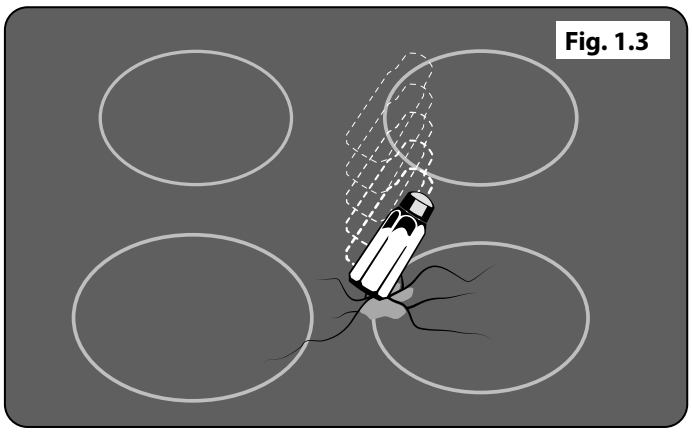
Fig. 1.3

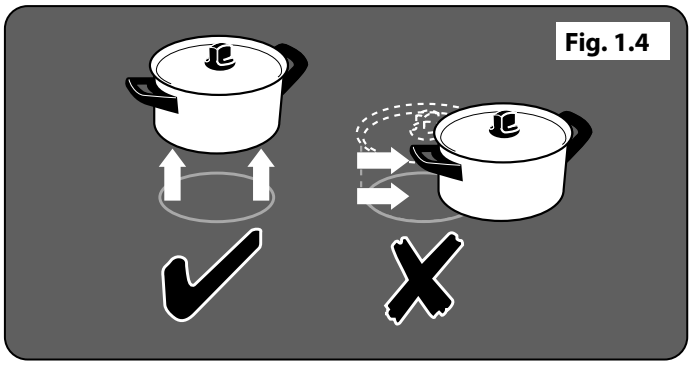
Fig. 1.4

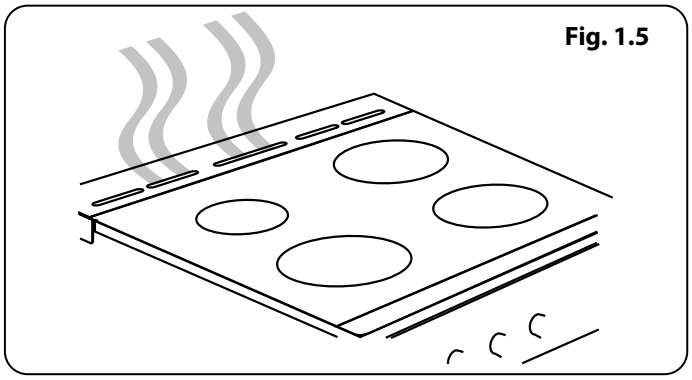
Fig. 1.5

2. Cooker Overview

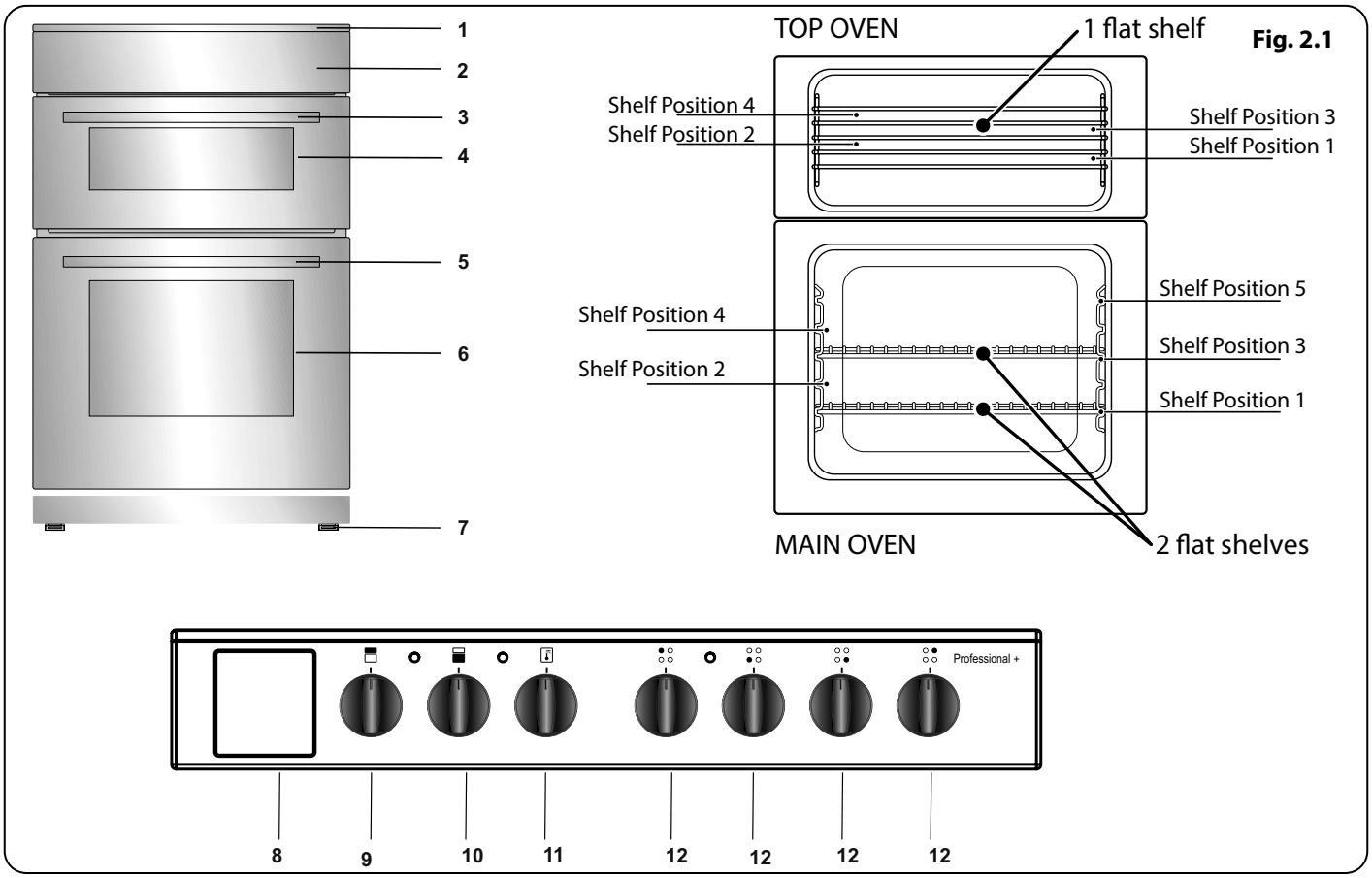

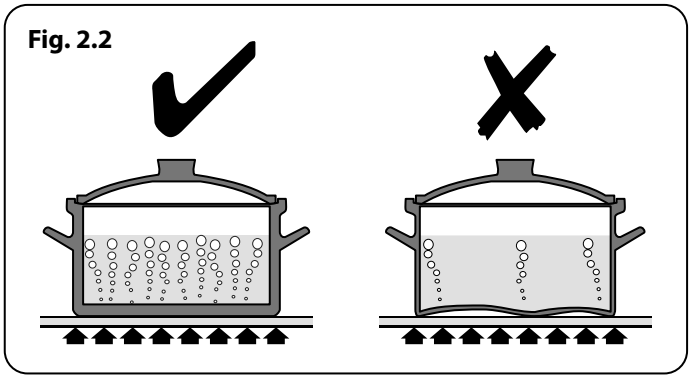

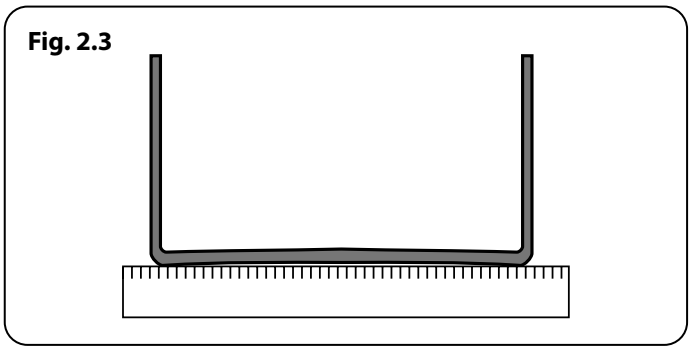

The 60cm cooker (**Fig. 2.1**) has the following features:

1. Cooktop

2. Control Panel

3. Top Oven Door Handle

4. Top Oven Door

5. Main Oven Door Handle

6. Main Oven Door

7. Adjustable Feet

8. Timer

9. Top Oven Control Knob

10. Main Oven Control Knob

11. Main Oven Thermostat Knob

12. Hob Control Knob

The Hob

Use only pans that are suitable for ceramic hobs. We recommend stainless steel and enamelled steel pans, as pots and pans with copper or aluminium bases leave traces on the hob that are difficult to remove.

The kind of pan you use and the quantity of food affects the setting required. Higher settings are required for larger quantities of food.

Pots and pans should have thick, smooth, flat bottoms (**Fig. 2.2**). This allows the maximum heat transfer from the hob to the pan, making cooking quick and energy efficient. Never use a round-bottomed wok, even with a stand.

The very best pans have bases that are very slightly curved up when cold. If you hold a ruler across the bottom you will see a small gap in the middle (**Fig. 2.3**). When they heat up the metal expands and lies flat on the cooking surface.

Make sure that the base of the pan is clean and dry to prevent any residue burning onto the hob panel. This also helps prevent scratches and deposits.

Always use pans that are the same size as (or slightly larger than) the areas marked on the hob top (**Fig. 2.4**). Using smaller pans wastes heat, and any spillage will be burnt on. Using a lid will help the contents boil more quickly.

Always lift pans off the hob (**Fig. 2.5**). Sliding pans may cause marks and scratches. Always turn the control to the 'OFF' position before removing a pan.

Take care when placing hot lids onto the hob surface. Lids that have been covering boiling or steaming foods can 'stick' to the ceramic glass. Should this occur, DO NOT attempt to lift the lid off the hotplate: this may damage the hob surface. Instead, slide the lid to the edge of the hob surface and remove.

There are indicator lights for each of the cooking areas (**Fig. 2.6**). The lights come on when a hob control is turned on and stays lit while the surface cools.

Always take care before touching the surface, even when the hob is turned off – it may be hotter than you think.

The ratings of the different cooking areas are shown in **Fig. 2.7**.

When cooking on the hob, you may see the hob area you are using switch off and on: this is caused by a safety device that limits the temperature of the hob. This is quite normal, especially when cooking at high temperatures. If it happens a lot with a particular pan, however, it may mean the pan is not suitable – perhaps too small or too uneven – for a ceramic hob.

For best results, preheat a covered serving dish for 10 minutes before adding food to it.

Use only heat-resistant dishes.

Important: When ceramic heaters are operated in higher heat settings, the heated areas may be seen switching on and off. This is due to a safety device which prevents the glass from overheating. This is normal at high temperatures, causing no damage to the hob and little delay in cooking times.

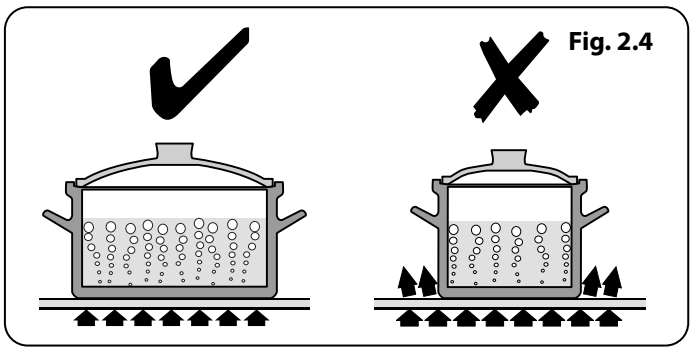

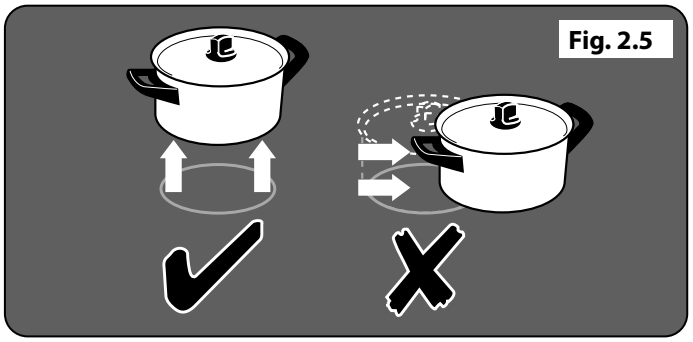

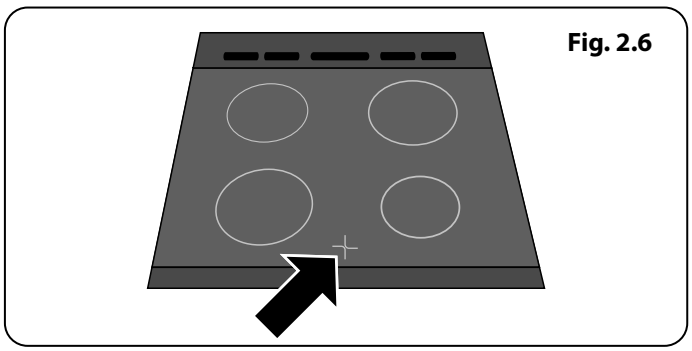

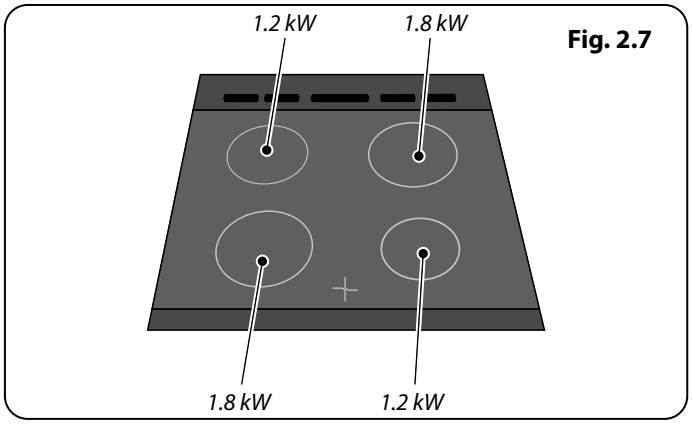

Fig. 2.8

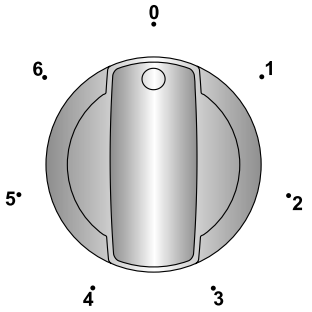

Fig. 2.9

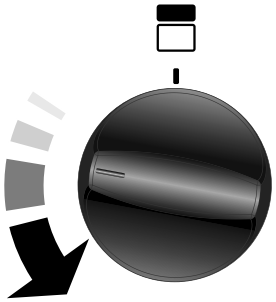

The ceramic heater is controlled by a 6 position knob (**Fig. 2.8**).

The ceramic heater is operated by turning the control knob to the required setting (**Fig. 2.9**). Near each control knob is a symbol which indicates the heater that is controlled by that knob. The on/off light on the control panel will show if any of the ceramic heaters are in use.

Knob Position	Function
0	Off position
1	Keep warm position
2,3	Heating position at low heat
4, 5, 6	Cooking, roasting and boiling position

Important: The knob rotation direction may differ according to the product specification.

Dual and Oval Heaters

Dual and oval heaters have two heating zones. To activate the outer zone of a dual/ oval heater, turn the knob to position.

Both outer zones will switch on. To deactivate the outer zone of a dual/oval heater, turn the knob to the 'Off' position. Both outer zones will switch off.

Residual Heat Indicator

After using the hob there will be heat stored in the ceramic glass called residual heat. If the residual heat level is greater than +60°C, the residual heat indicator will be active for the cooking zone which is above this temperature. If the power supply to the hob is disconnected while the residual heat indicator is on, the warning light will flash when the power is reconnected. The display will flash until the residual heat has decreased or until one of the cooking zones is activated.

Important: When ceramic heaters are operated in higher heat settings, the heated areas may be seen switching on and off. This is due to a safety device which prevents the glass from overheating. This is normal at high temperatures, causing no damage to the hob and little delay in cooking times.

Never operate the hob without pans on the cooking zone. Use only flat saucepans with a sufficiently thick base.

Make sure the bottom of the pan is dry before placing it on the hob.

While the cooking zone is in operation, it is important to ensure that the pan is centred correctly above the zone.

In order to conserve energy, never use a pan with a different diameter to the hotplate being used.

Preheating

We recommend you preheat the oven for 10 minutes before use. For recipes needing high temperatures, such as bread, pastries, scones or soufflés, best results are achieved if the oven is preheated first. For best results when cooking from frozen or cooking chilled ready meals, always preheat the oven first.

Cooking

- Ensure that food is placed centrally on the shelf and that there is sufficient room around the baking tray / dish to allow for maximum circulation.
- Stand dishes on a suitably sized baking tray on the shelf to prevent spillage onto the oven base and to help reduce the amount of cleaning required.
- The material and finish of the baking tray and dishes used will affect base browning. Enamel, dark, heavy or nonstick utensils increase base browning. Shiny aluminium or polished steel trays reflect the heat away and reduce base browning.
- When cooking more than one dish in the oven, place dishes centrally on different shelves rather than cluster several dishes on one shelf. This will allow the heat to circulate freely for the best cooking results.
- If you are cooking more than one tray of similar items, for example cakes or biscuits, swap the trays during cooking or remove the top tray when the food on it is cooked and move the lower tray to the higher shelf to finish cooking.
- **DO NOT** place baking trays directly on the oven base as it interferes with the oven air circulation and can lead to base burning. Use the lower shelf position.

The Ovens

Before using the ovens for the first time and to dispel manufacturing odours turn them to the maximum temperature setting and run them empty for 45 minutes.

To clear the smell make sure the room is well ventilated to the outside, by opening windows or turning on a cookerhood.

We recommend that people with respiratory problems should vacate the area for this brief period.

Both ovens are conventional ovens. They are fitted with a special safety device which stops the flow of gas if the flame goes out.

If, when you release the control knob the burner goes out, then the safety device has not held in. Turn the oven control knob to the off (0) position and wait for one minute. Repeat the operation but hold the control knob in for slightly longer.

'S' (Slow) Cooking Function

Both ovens feature an 'S' setting. This is a low temperature setting for cooking food over a long period. The oven centre is set at 100 ºC. The 'S' setting can also be used for keeping food warm.

The approximate temperature for each position is displayed in.

Oven Accessories

The Grill Pan and Handle Set (Fig. 2.10) (Fig. 2.11)

⚠ **Warning: The top oven door must be fully open when this function is selected.**

The grill pan set is best used for grilling steaks and similar foods.

⚠ **WARNING: The grill pan has a detachable handle. Make sure when using the grill pan handle that it is centralised and secure, as shown in the figure.**

⚠ **DO NOT leave the handle in position when grilling.**

Top Oven Shelves (Fig. 2.12)

Clean the accessories thoroughly with warm water, detergent and a soft clean cloth on first use.

- Insert the accessory to the correct position inside the oven.
- Take care removing cookware and/or accessories out of the oven. Hot meals or accessories can cause burns.
- The accessories may deform with heat. Once they have cooled down, they will recover their original appearance and performance.
- Trays and wire grids can be positioned on any level from 1 to 4.

Please note: Level is 3 recommended for grill cooking.

Bottom Oven Shelves (Fig. 2.17)

Clean the accessories thoroughly with warm water, detergent and a soft clean cloth on first use.

Insert the accessory to the correct position inside the oven.

- Allow at least a 1 cm space between the fan cover and accessories.
- Take care removing cookware and/or accessories out of the oven. Hot meals or accessories can cause burns.
- The accessories may deform with heat. Once they have cooled down, they will recover their original appearance and performance.
- Trays and wire grids can be positioned on any level from 1 to 5.
- Level 3 is recommended for single level cooking.

The Wire Grid for Deep Trays (Fig. 2.17)

Make sure the wire grid is correctly placed within a deep tray. It is recommended to use this accessory for grilling steaks, meatballs and similar food.

The Deep Tray (Fig. 2.14)

The deep tray is best used for cooking stews.

Put the tray into any rack and push it to the end to make sure it is placed correctly.

The Wire Grid (Fig. 2.15)

The wire grid is best used for grilling or for processing food in oven-friendly containers.

⚠ **WARNING Place the grid to any corresponding rack in the oven cavity correctly and push it to the end (Fig. 2.16).**

Fig. 2.10

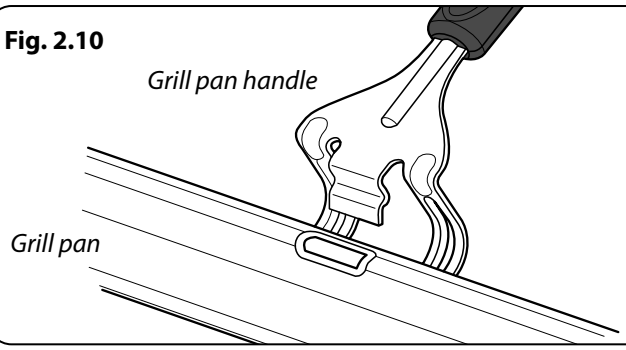

Fig. 2.11

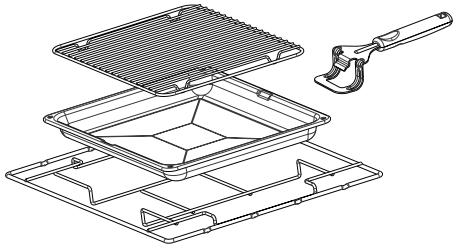

Fig. 2.12

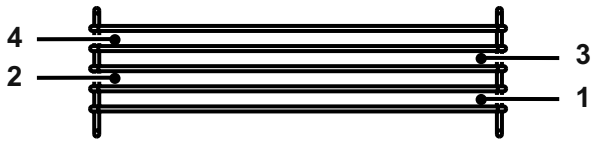

Fig. 2.13

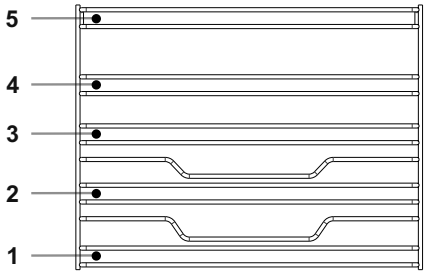

Fig. 2.17

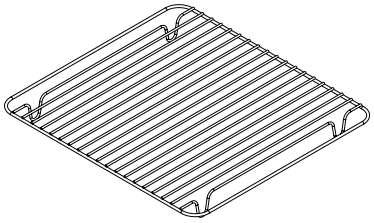

Fig. 2.14

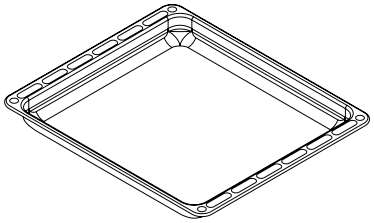

Fig. 2.15

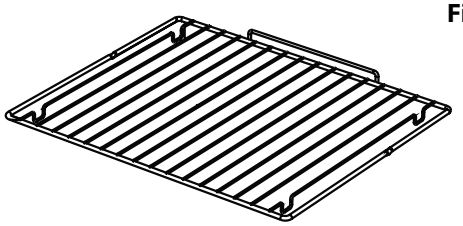

Fig. 2.16

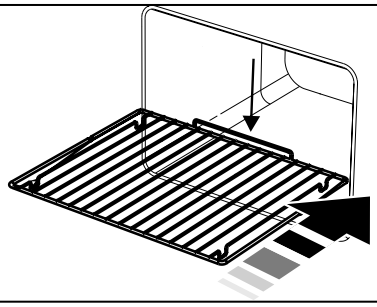

3. Multifunction Modes

* The functions available on your oven may differ from those listed below depending on the model purchased.

Main Oven Control knobs

Main Oven Symbols	Key
	Off
	Defrost
	Fan Oven
	Conventional Oven
	Fan assisted
	Full Grill
	Full Grill and Fan

Main Oven Functions

Defrost

Switch on the **Defrost** function using the main oven function control knob.

The oven's warning lights will switch on, and the fan will start operating. To use the defrost function, place your frozen food on a shelf in the middle of the oven. It is recommended that you put an oven tray under the defrosting food to catch accumulated water due to melting ice. This function will not cook or bake your food, it will only help to defrost it.

Fan Oven

Switch on the **Fan oven** function using the main oven function control knob. The oven's thermostat and warning lights will switch on, and the ring heating element and fan will start operating. The temperature can be adjusted using the main oven function control knob. The turbo function evenly disperses the heat in the oven so all food on all racks will cook evenly. It is recommended that you preheat the oven for 10 minutes.

Conventional Oven (Top and Base Heat)

Switch on the **Conventional Oven** function using the main oven function control knob.

The oven's thermostat and warning lights will switch on, and the lower and upper heating elements will start operating. The temperature can be adjusted using the main oven function control knob.

The static cooking function emits heat, ensuring even cooking of food. This is ideal for making pastries, cakes, baked pasta, lasagne and pizza. Preheating the oven for 10 minutes is recommended and it is best to cook on only one shelf at a time in this function.

Fan assisted:

Switch on the **Fan assisted** function using the main oven control knob. The oven's thermostat and warning lights will switch on, and the upper and lower heating elements and fan will start operating. The temperature can be adjusted using the main oven thermostat knob. Cooking is carried out by the lower and upper heating elements within the oven while the fan provides air circulation, dispersing the heat and giving the food a slightly grilled effect. It is recommended you preheat the oven for 10 minutes.

Full Grill

Switch on the **Full Grill** function using the main oven control knob. The oven's thermostat and warning lights will switch on, and the grill heating element will start operating. The temperature can be adjusted using the main oven thermostat knob. This function is used for grilling and toasting food. Use the upper shelves of the oven. Lightly brush the wire grid with oil to stop food sticking and place food in the centre of the grid. Always place a tray beneath the food to catch any drips of oil or fat. It is recommended that you leave the grill to preheat for 10 minutes.

Warning: When grilling, the oven door must be closed and the oven temperature should be adjusted to 200°C.

Full Grill and Fan

Switch on the **Full Grill and Fan** function using the main oven control knob. The oven's thermostat and warning lights will switch on, and the grill heating element and fan will start operating. The temperature can be adjusted using the main oven thermostat knob. This function is ideal for thicker foods. When grilling, use the upper shelves of the oven. Lightly brush the wire grid with oil to stop food sticking and place food in the centre of the grid. Always place a tray beneath the food to catch any drips of oil or fat.

Warning: When grilling, the oven door must be closed and the oven temperature should be adjusted to 200°C.

Top Oven Control knobs

Top Oven Symbols	Key
0	Off
	Conventional Oven
	Browning Element
	Half Grill
	Full Grill

Top Oven Functions

*The functions available on your oven may differ from those listed below depending on the model purchased.

Conventional Oven (Top and Base Heat)

Switch on the **Conventional Oven** function using the top oven function control knob.

The oven thermostat and warning lights will illuminate, and the upper and lower heating elements will switch on. The temperature can be adjusted using the top oven function control knob.

The heat generated by the upper and lower heating elements ensures that food is cooked evenly. You will find this setting ideal for cooking cakes, baked pasta, lasagne, and pizza. We recommend that the oven is preheated for 10 minutes before use and that you cook on one rack at a time.

Browning Element

Switch on the **Browning** function using the top oven function control knob. The oven thermostat and warning lights will illuminate, and the upper heating element will switch on. The temperature setting will set to the highest level for this function. The UPPER heating function is ideal for heating food or for frying the top of food that has already been cooked, as the heat radiates from the upper heating element closest to the top of the food.

Half Grill:

Switch on the **half grill** function using the top oven function control knob. The oven thermostat and warning lights will illuminate, and the grill heating element will switch on. Use this function for grilling. When you have finished grilling, switch the top oven off. Keep children away from the oven during grilling and until it has fully cooled after use.

Warning: The top oven door must be fully open when this function is selected.

Full Grill

Switch on the **full grill** function using the function selector knob. The oven thermostat and warning lights will illuminate, and the grill and upper heating elements will switch on. Use this function for wide area grilling. When you have finished grilling, switch the top oven off. Keep children away from the oven during grilling and until the oven has fully cooled after use.

Warning: The top oven door must be fully open when this function is selected.

4. Clock

The time must be set before you start using the oven. Following the power connection, the symbol "**A**" and "**00:00**" or "**12:00**" will flash on the display.

Fig. 4.1

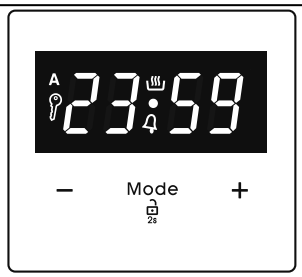

Function	Description
A	Auto Cooking
	Manual Cooking
	Key Lock
	Minute Minder
Mode	Mode Function
–	Decrease Timer
+	Increase Timer
23 59	Timer Display

Setting the time

The clock must be set to the time of day before the oven will work

Step. 1

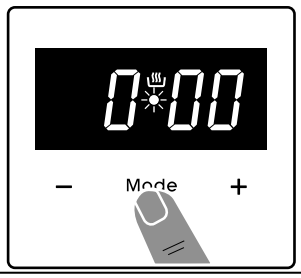

Step. 2

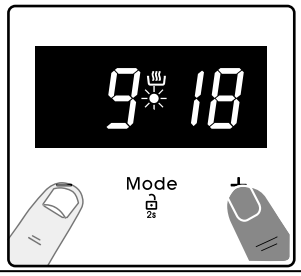

Press either [+] or [-] buttons to set the clock..

Step. 3

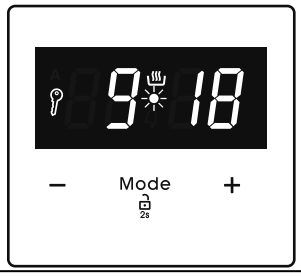

After a few seconds, the dot will stop flashing and will remain illuminated.

Key Lock

The key lock automatically activates after the timer has not been used for 7 seconds. " " symbol will appear and remain illuminated.

Step. 1

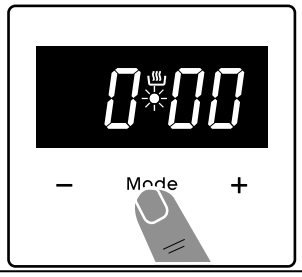

To unlock the timer buttons, press and hold the "MODE" button for 2 seconds. The desired operation can then be carried out.

Setting the minute minder

Step. 1

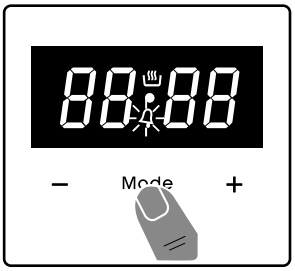

Note: The cook symbol [ ] remains visible during normal operation.

Step. 2

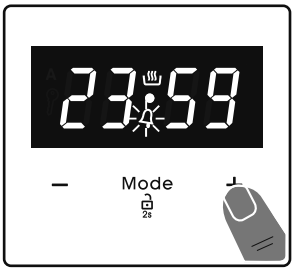

Press either [+] or [-] buttons to set the tiimer.

Step. 3

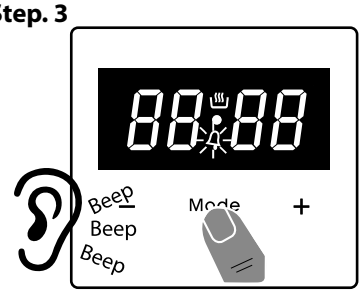

Once the specified time has elapsed an alarm will sound. To stop the alarm press the MODE button.

Setting the cooking duration *(main oven only)*

You have set the required temperature and function mode and you would like the oven to automatically stop. Note: The cook symbol [♨] remains visible during normal operation.

Step. 1

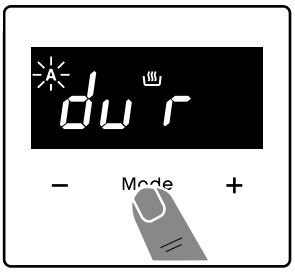

Press "MODE" until you see "dur" symbol on the display screen.

The symbol "A" will flash.

Step. 2

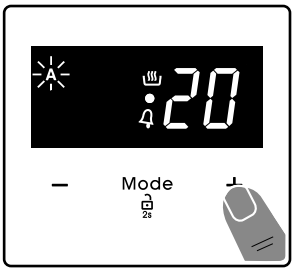

Set the cooking duration, for example add 20 minutes.

Step. 3

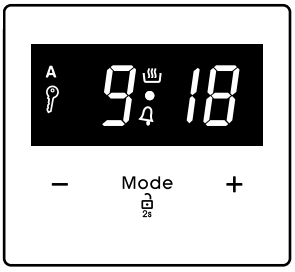

The current time will reappear on the screen, and the symbols "A", and "[♨]" will remain illuminated.

Step. 4

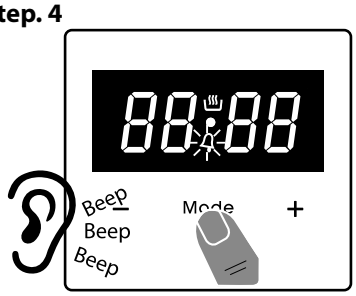

Once the specified time has elapsed an alarm will sound. To stop the alarm press the MODE button.

⚠ **REMEMBER** Turn the oven control knob (s) to 0.

Setting the finishing time *(main oven only)*

You have set the required temperature and function mode and you would like the oven to automatically **stop at a later time**. **Note:** The cook symbol [♨] remains visible during normal operation.

Step. 1

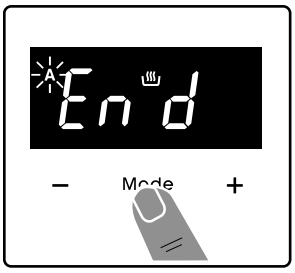

Press "MODE" until you see "End" symbol on the display screen.

The symbol "A" will flash.

Step. 2

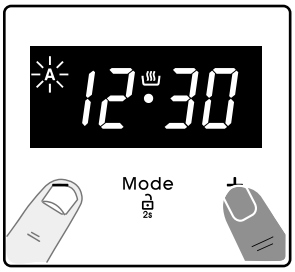

Press the "+" and "-" buttons to set the desired finishing time.

Step. 3

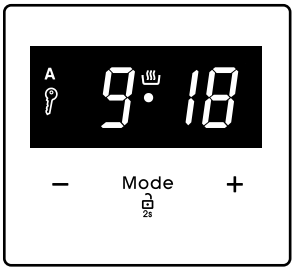

The current time will reappear on the screen, and the symbols "A", and "[♨]" will remain illuminated.

Step. 4

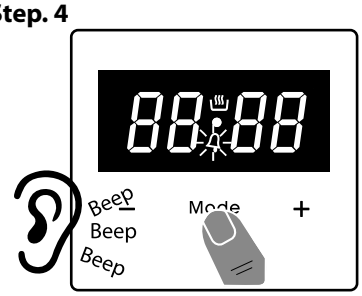

Once the specified time has elapsed an alarm will sound. To stop the alarm press the MODE button.

⚠ **REMEMBER** Turn the oven control knob (s) to 0.

To start and stop the oven automatically

(main oven only)

You have set the required temperature and function mode and you would like the oven to automatically **stop at a later time**. **Note:** The cook symbol [♨] remains visible during normal operation.

Step. 1

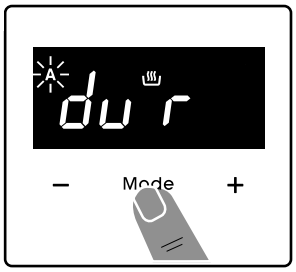

Press "MODE" until you see "dur" symbol on the display screen.

The symbol "A" will flash.

Step. 2

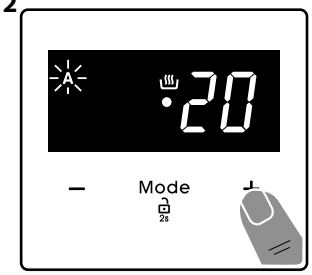

Press the "+" and "-" buttons to set the desired finishing time.

Step. 3

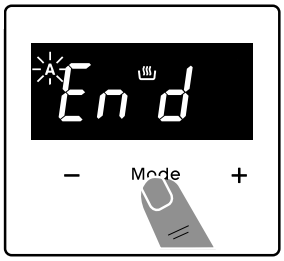

Press "MODE" until you see "End" symbol on the display screen.

The symbol "A" will flash.

Step. 4

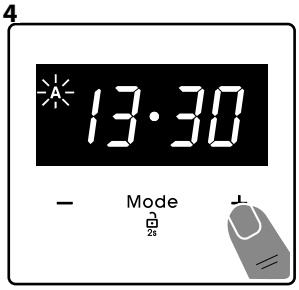

In this example the oven will come on automatically at 13.10 and switch off at 13.30am.

Step. 5

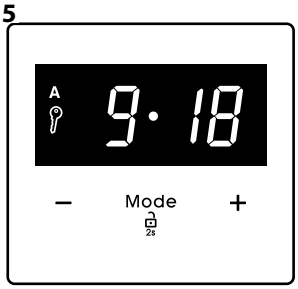

The current time will reappear on the screen, and the symbols "A", and will remain illuminated.

Step. 6

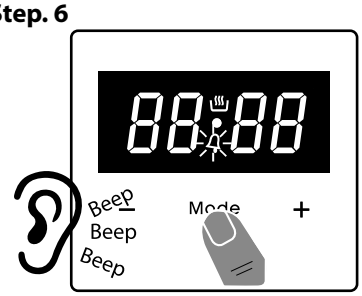

Once the specified time has elapsed an alarm will sound. To stop the alarm press the MODE button.

⚠ **REMEMBER** Turn the oven control knob (s) to 0.

Changing the frequency of the alarm

Step. 1

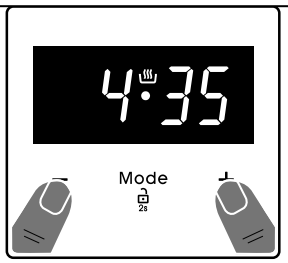

Step. 2

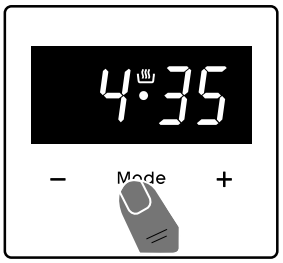

Step. 3

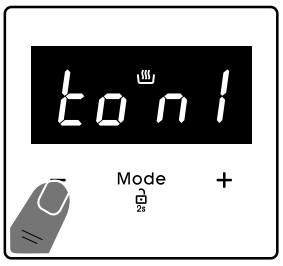

Step. 4

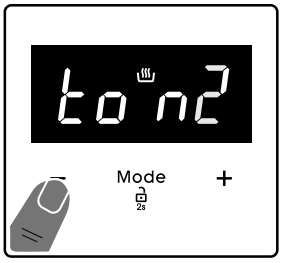

Step. 5

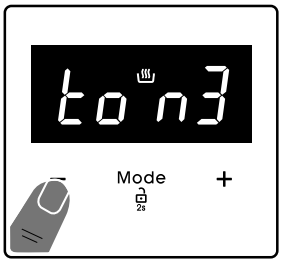

5. Cooking Tips

Tips on Cooking with the Timer

If you want to cook more than one dish, choose dishes that require approximately the same cooking time. However, dishes can be 'slowed down' slightly by using small containers and covering them with aluminium foil, or 'speeded up' slightly by cooking smaller quantities or placing them in larger containers.

Very perishable foods such as pork or fish should be avoided if a long delay period is planned, especially in hot weather.

⚠ **Do not place warm food in the oven to be timed.**

⚠ **Do not use a timed oven that is already warm.**

Whole poultry must be thoroughly defrosted before being placed in the oven. Check that meat and poultry are fully cooked before serving.

General Oven Tips

The wire shelves should always be pushed firmly to the back of the oven.

Baking trays with food cooking on them should be placed level with the front edge of the oven's wire shelves. Other containers should be placed centrally. Keep all trays and containers away from the back of the oven, as overbrowning of the food may occur.

When the oven is on, do not leave the door open for longer than necessary, otherwise the knobs may get very hot.

- Always leave a "finger's width" between dishes on the same shelf. This allows the heat to circulate freely around them.
- To reduce fat splashing when you add vegetables to hot fat around a roast, dry them thoroughly or brush lightly with cooking oil.
- Where dishes may boil and spill over during cooking, place them on a baking tray.
- The 'Cook & Clean' oven liners (see 'Cleaning Your Cooker') work better when fat splashes are avoided. Cover meat when cooking with foil or use a roasting bag.
- Sufficient heat rises out of the oven while cooking to warm plates in the grill compartment.
- If you want to brown the base of a pastry dish, preheat the baking tray for 15 minutes before placing the dish in the centre of the tray.

6. Cooking Table

The oven control settings and cooking times given in the table below are intended to be used **as a guide only**. Individual tastes may require the temperature to be altered to provide a preferred result.

Food is cooked at lower temperature in a fan oven than in a conventional oven. When using recipes, reduce the fan oven temperature by 10 °C and the cooking time by 5-10 minutes. The temperature in the fan oven does not vary with height in the oven so you can use any shelf.

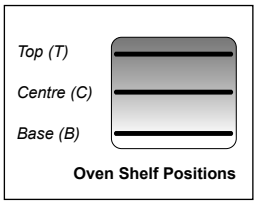

Food	Conventional Oven °C (Shelf Position)	Fan Oven Temperature	Approximate Cooking Time	
Meat				
Beef (no bone)	160 (C)	150 °C	30-35 minutes per 500g +30-35 minutes.	Thoroughly thaw frozen joints before cooking. Meat may be roasted at 220°C (210°C for fan oven) and the cooking time adjusted accordingly. For stuffed and rolled meats, add approximately 10 minutes per 500g, or cook at 200°C (190°C) for 20 minutes then 160°C (150°C) for the remainder.
	200 (C)	190 °C	20-25 minutes per 500g +20-25 minutes.	
Lamb	160 (C)	150 °C	30-35 minutes per 500g +30-35 minutes.	
	200 (C)	190 °C	25-30 minutes per 500g +25-30 minutes.	
Pork	160 (C)	150 °C	35-40 minutes per 500g +35-40 minutes.	
	200 (C)	190 °C	25-30 minutes per 500g +25-30 minutes.	
Poultry	160 (C)	150 °C	20-25 minutes per 500g +20-25 minutes.	For stuffed poultry, you could cook at 200°C (190°C) for 20 minutes then 160°C (150°C) for remainder. Do not forget to include the weight of the stuffing. For fresh or frozen pre-packed poultry, follow instructions on the pack. Thoroughly thaw frozen poultry before cooking.
Chicken	200 (C)	190 °C	15-20 minutes per 500g +15-20 minutes.	
	160 (C)	150 °C	20 minutes per 500g +20 minutes.	
Turkey	200 (C)	190 °C	15 minutes per 500g +15 minutes.	
	160 (C)	150 °C	25-30 minutes per 500g.	
Duck	200 (C)	190 °C	20 minutes per 500g.	
Casserole	140-150 (C)	130 °C-140 °C	2-4 hours according to recipe.	
Yorkshire Pudding	220 (C)	210 °C	Large tins 30-35 minutes; individual 10-20 minutes.	
Cake				
Very rich fruit - Christmas, wedding, etc.	140 (C/B)	130 °C	45-50 minutes per 500g of mixture.	Using the conventional oven: When two tier cooking leave at least one runner space between shelves. Position the baking tray with the front edge along the front of the oven shelf.
Fruit 180 mm tin	150 (C/B)	140 °C	2-2½ hours.	
Fruit 230 mm tin	150 (C/B)	140 °C	Up to 3½ hours.	
Madeira 180 mm	160 (C/B)	150 °C	80-90 minutes.	
Queen cakes	190 (C/B)	180 °C	15-25 minutes.	
Scones	220 (C/B)	210 °C	10-15 minutes.	Up to three tiers can be cooked on, in a fan oven, at the same time. But make sure to leave at least one runner space between each shelf being cooked on.
Victoria sandwich				
180 mm tin	180 (C/B)	170 °C	20-30 minutes.	
210 mm tin	180 (C/B)	170 °C	30-40 minutes.	
Desserts				
Shortcrust tarts	200 (C/B)	190 °C	20-30 minutes on a preheated tray.	
Fruit pies	200 (C/B)	190 °C	35-45 minutes.	
Tartlets	200 (C/B)	190 °C	10-20 minutes according to size.	Up to three tiers can be cooked on, in a fan oven, at the same time. But make sure to leave at least one runner space between each shelf being cooked on.
Puff pastry	210 (C/B)	200 °C	20-40 minutes according to size.	
Meringues	100 (C/B)	90 °C	2-3 hours.	
Baked egg custard	160 (C/B)	150 °C	45-60 minutes.	
Baked sponge pudding	180 (C/B)	170 °C	40-45 minutes.	
Milk pudding	140-150 (C/B)	130 °C-140 °C	2 to 3 hours.	
Bread	210 (C)	200 °C	20-30 minutes.	
Fish	Fanned Grilling			
Fillet	190 (C/B)	190 °C (C/B)	15-20 minutes	
Whole	190 (C/B)	190 °C (C/B)	15-20 minutes per 500g.	
Steak	190 (C/B)	190 °C (C/B)	Steaks according to thickness.	

7. Cleaning Your Cooker

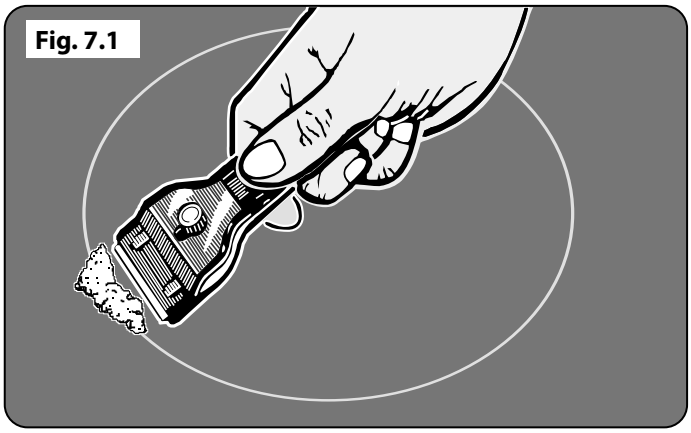

Isolate the electricity supply before carrying out any major cleaning. Allow the cooker to cool.

⚠ **Never use paint solvents, washing soda, caustic cleaners, biological powders, bleach, chlorine based bleach cleaners, coarse abrasives or salt.**

⚠ **Do not mix different cleaning products – they may react together with hazardous results.**

All parts of the cooker can be cleaned with hot soapy water – **but take care that no surplus water seeps into the appliance**.

Remember to switch the electricity supply back on and reset the clock before reusing the cooker.

Hob

Daily Care

First of all make sure that all heat indicator lights are off and that the cooking surface is cool. Apply a small dab of ceramic cleaning cream in the centre of each area to be cleaned. Dampen a clean paper towel and work the cream onto the cooking surface. As a final step, wipe the cooking surface with a clean, dry paper towel.

Cleaning Spills

For spills and boil-overs that occur while cooking, turn the unit off and wipe the area surrounding the hot zone with a clean paper towel. If a spill (other than a sugary substance) is on the hot zone, do not clean until the unit has completely cooled down, and then follow the instructions below ('Cleaning Burned-on Spills').

If you accidentally melt anything on the surface, or if you spill foods with a high sugar content (preserves, tomato sauce, fruit juice, etc.), remove the spill IMMEDIATELY with a razor scraper, while the unit is still hot.

IMPORTANT: Use an oven glove to protect your hand from potential burns.

Scrape the major spill or melted material from the cooking zone and push into a cold area. Then, turn the unit 'OFF' and allow it to cool before cleaning further. After the cooking surface cools down and the heat indicator lights go off, follow the 'Daily Care' procedure outlined above.

Cleaning Burned-on Spills

Make sure that the heat indicator lights are off and that the hob is cool. Remove the excess burned-on substance with a single-edged razor scraper. Hold the scraper at an angle of about 30° to the surface and then scrape off the burned-on matter (**Fig. 5.1**).

Once you have removed as much as possible with the scraper, follow the 'Daily Care' procedure outlined above.

Grill

The grill pan can be easily removed for cleaning.

The grill pan and trivet should be washed in hot soapy water. After grilling meats or any foods that soil, leave to soak for a few minutes immediately after use. Stubborn particles may be removed from the trivet using a nylon brush. Alternatively, the grill pan can be washed in a dishwasher.

⚠ **Before you remove any of the grill parts for cleaning, make sure that they are cool, or use oven gloves.**

⚠ **DO NOT use any abrasive substances.**

Control Panel and Doors

Avoid using any abrasive cleaners, including cream cleaners. For best results, use a liquid detergent.

The same cleaner can also be used on the doors, or alternatively, using a soft cloth wrung out in clean hot soapy water. You can use the same method for cleaning the control panel and knobs.

After cleaning, polish with a dry cloth.

Top Oven Door Panel

The top oven door can be removed for ease of cleaning.

Open the oven door fully and release the saddle brackets situated either side (**Fig. 7.2**). Ensure that the saddle brackets are opened to their end positions, to prevent the hinges from retracting into the oven door.

Close the oven door until it is almost fully closed then carefully lift and un-hook the door panel from the cooker (**Fig. 7.3**).

To re-assemble, ensure that the saddle bracket and hinge mechanisms are correctly positioned (**Fig. 7.4**).

Carefully replace the door panel using the hinge locating notches, then close the saddle bracket (**Fig. 7.5**).

⚠ **DO NOT use harsh abrasive cleaners or sharp metal scrapers to clean the oven door glass since they can scratch the surface, which may result in shattering of the glass.**

Ovens

Cleaning the Inside of the Oven (Fig. 7.6)

- The inside of enamelled ovens are best cleaned while the oven is warm.
- Wipe the oven with a soft cloth soaked in soapy water after each use. Then, wipe the oven over again with a wet cloth and dry it.
- You may need to use a liquid cleaning material occasionally to completely clean the oven.

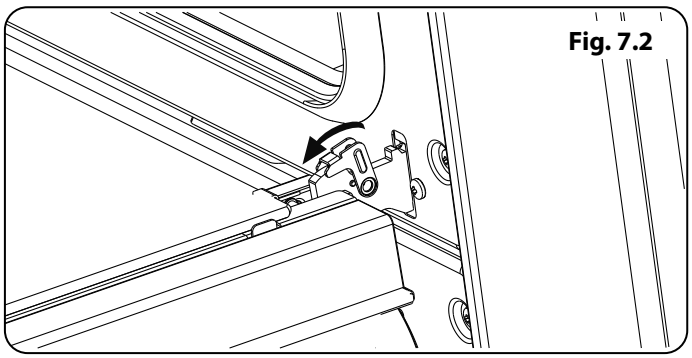

Fig. 7.2

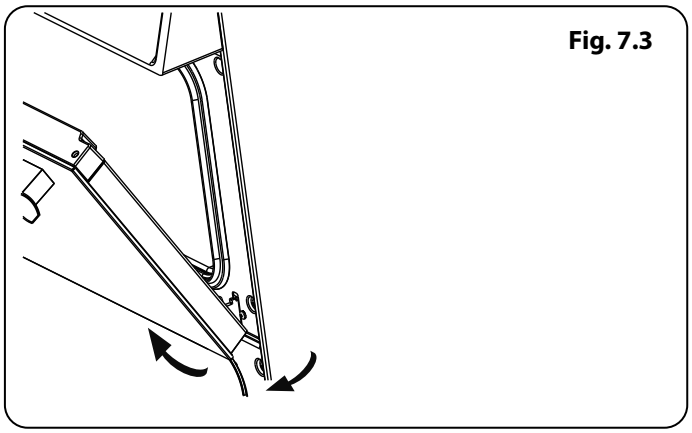

Fig. 7.3

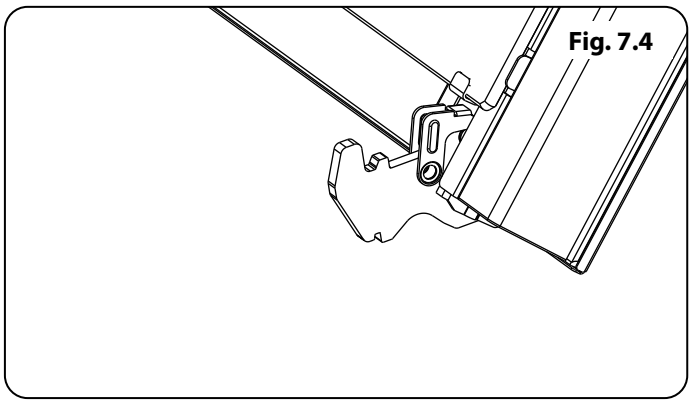

Fig. 7.4

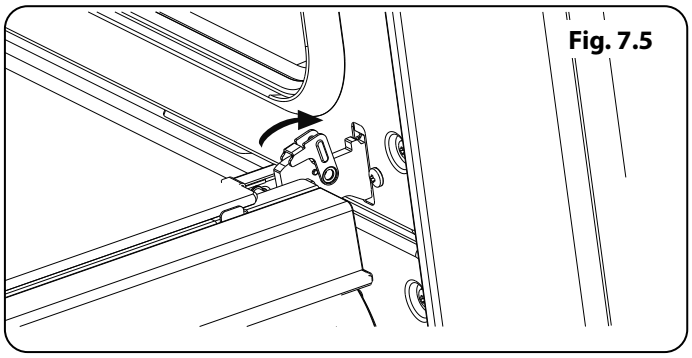

Fig. 7.5

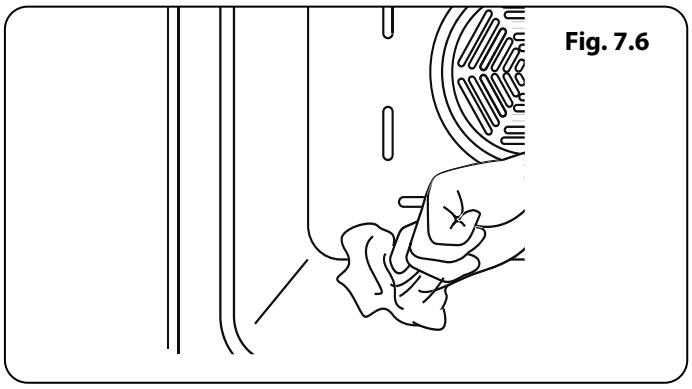

Fig. 7.6

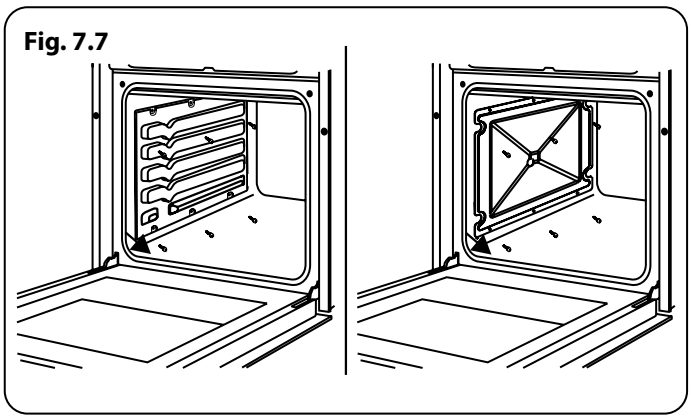

Catalytic Cleaning

Catalytic liners are installed within the oven cavity. These are the matte-finished, light-coloured panels on the sides and/ or matte-finished panel at the rear of the oven. They work by collecting any grease and oil residue during cooking.

The liner self-cleans by absorbing fats and oils and burning them to ash, which can then be easily removed from the floor of the oven with a damp cloth. The lining must be porous to be effective. The liner may discolour with age.

If a large amount of fat is spilled onto the liner, it may reduce its efficiency. To overcome this problem, set the oven to maximum temperature for about 20 - 30 minutes. After the oven has cooled, wipe out the floor of the oven.

Manual cleaning of the catalytic liners is not recommended. Damage will occur if a soap-impregnated steel wool pad or any other abrasives are used. In addition, we do not recommend the use of aerosol cleaners on the liners. The walls of a catalytic liner may become ineffective due to excess grease. The excess grease can be removed with a soft cloth or sponge soaked in hot water and the cleaning cycle can be carried out as described above.

Removal of the Catalytic Liner

To remove the catalytic liner, remove the screws holding each catalytic panel to the oven (**Fig. 7.7**).

Cleaning the Gas Hob

- Clean the gas hob on a regular basis.
- Take off the pan supports, caps and crowns of the hob burners.
- Wipe the hob surface with a soft cloth soaked in soapy water. Then, wipe the hob surface over again with a wet cloth and dry it.
- Wash and rinse the hob-burner caps. Do not leave them wet. Dry them immediately with a dry cloth.
- Make sure you re-assemble all parts correctly after cleaning.
- The surfaces of the pan supports may become scratched over time due to the use. This is not a production fault.

⚠ **Do not use a metal sponge for cleaning any part of the hob.**

⚠ **Make sure no water gets into the burners as this may block the injectors.**

Cleaning the Glass Parts

- Clean the glass parts of your appliance on a regular basis.
- Use a glass cleaner to clean the inside and outside of the glass parts. Then, rinse and dry them thoroughly with a dry cloth.

Cleaning the Enamelled Parts

- Clean the enamelled parts of your appliance on a regular basis.
- Wipe the enamelled parts with a soft cloth soaked in soapy water. Then, wipe them over again with a wet cloth and dry them.

⚠ **Do not clean the enamelled parts while they are still hot from cooking.**

⚠ **Do not leave vinegar, coffee, milk, salt, water, lemon or tomato juice on the enamel for a long time.**

Cleaning the Stainless Steel Parts

- Clean the stainless steel parts of your appliance on a regular basis.
- Wipe the stainless steel parts with a soft cloth soaked in only water. Then, dry them thoroughly with a dry cloth.

⚠ **Do not clean the stainless steel parts while they are still hot from cooking.**

⚠ **Do not leave vinegar, coffee, milk, salt, water, lemon or tomato juice on the stainless steel for a long time.**

Cleaning Painted Surfaces

Spots of tomato, tomato paste, ketchup, lemon, oil derivatives, milk, sugary foods, sugary drinks and coffee should be cleaned with a cloth dipped in warm water immediately. If these stains are not cleaned and allowed to dry on the surfaces they are on, they should NOT be rubbed with hard objects (pointed objects, steel and plastic scouring wires, surface-damaging dish sponge) or cleaning agents containing high levels of alcohol, stain removers, degreasers, surface abrasive chemicals. Otherwise, corrosion may occur on the powder painted surfaces, and stains may occur. The manufacturer will not be held responsible for any damage caused by the use of inappropriate cleaning products or methods.

Changing the Oven Lamp

⚠ **WARNING: Switch off the appliance and allow it to cool before cleaning your appliance.**

- Remove the glass lens, and then remove the bulb.
- Insert the new bulb (resistant to 300 °C) to replace the bulb that you removed (230 V, 15-25 Watt, Type E14).
- Replace the glass lens, and your oven is ready for use illumination..

Other Controls

- Periodically check expiratation date of the gas connection pipe.
- Periodically check the gas connection pipe. If a defect is found, contact an authorised service provider to have it changed.
- If a defect is found while operating the control knobs of the appliance, contact an authorised service provider.

8. Troubleshooting

Problem	Possible Cause	Solution
The hob or cooking zones cannot be switched on.	• There is no power supply.	• Check the household fuse for the appliance. • Check whether there is a power cut by trying other electronic appliances.
Oven does not turn on.	• Power is turned off.	• Check whether there is power supplied. Also check that other kitchen appliances are working.
No heat or oven does not warm up.	• Oven temperature control is incorrectly set. • Oven door has been left open.	• Check the oven temperature control knob is set correctly.
Noise		• It is normal for some metal parts on the cooker to produce noise when in use.
Cooking is uneven within the oven.	• Oven shelves are incorrectly positioned.	• Check that the recommended temperatures and shelf positions are being used. • Do not frequently open the door unless you are cooking things that need to be turned. If you open the door often, the interior temperature will be lower and this may affect the results of your cooking.
Oven light does not operate.	• Lamp has failed. • Electrical supply is disconnected or switched off.	• Replace lamp according to the instructions. • Make sure the electrical supply is switched on at the wall socket outlet.
The timer buttons cannot be pressed properly.	• There is foreign matter caught between the timer buttons. • Touch model: there is moisture on the control panel. • The key lock function is set.	• Remove the foreign matter and try again. • Remove the moisture and try again. • Check whether the key lock function is set.
The oven fan (if available) is noisy.	• Oven shelves are vibrating.	• Check that the oven is level. • Check that the shelves and any bake ware are not vibrating or in contact with the oven back panel.
Cooling fan (if available) isn't working	• Electrical supply is disconnected or switched off.	• Make sure the electrical supply is switched on at the wall socket outlet.

Transport

If you need to transport the product, use the original product packaging and carry it using its original case. Follow the transport signs on the packaging. Tape all independent parts to the product to prevent damaging the product during transport.

If you do not have the original packaging, prepare a carriage box so that the appliance, especially the external surfaces of the product, is protected against external threats.

9. Installation

Dear Installer

Before you start your installation, please complete the details below, so that, if your customer has a problem relating to your installation, they will be able to contact you easily.

Installer's Name
Installer's Company
Installer's Telephone Number
Appliance Serial Number

Safety Requirements and Regulations

⚠ **Do not operate the appliance before it is fully installed.**

⚠ **This cooker must be installed in accordance with the relevant instructions in this booklet, with the relevant national and local regulations, and with the local electricity supply companies' requirements.**

⚠ **The appliance must be installed in accordance with the regulations in force and only in a well ventilated space.**

⚠ **Ensure that the electrical chord is not wedged during installation. If the chord is damaged, it must be replaced by the manufacturer, its service agent or similarly qualified person.**

⚠ **Read the instructions before installing or using this appliance.**

Provision of Ventilation

This appliance is not connected to a combustion products evacuation device. Therefore, particular attention must be given to the relevant requirements regarding ventilation.

All rooms require a window that can be opened, or equivalent, while some rooms require a permanent vent in addition to the window.

Location of Cooker

The cooker may be installed in a kitchen/kitchen diner but NOT in a room containing a bath or shower.

This appliance is designed for domestic cooking only. Use for any other purpose could invalidate any warranty or liability claim.

Positioning the Cooker

Fig. 9.1 shows the minimum recommended distance from the cooker to nearby surfaces.

The cooker should not be placed near the fridge or on a base.

The hotplate surround should be level with, or above, any adjacent work surface.

The cooker is designed to fit between kitchen cabinets spaced over 600 mm apart. 5 mm clearance either side of the appliance is recommended to allow removal of the cooker for servicing.

For non-combustible surfaces (such as unpainted metal or ceramic tiles), this can be reduced to 25 mm.

A minimum space of 650 mm is required between the top of the hob and a horizontal combustible surface.

*Any cookerhood should be installed in accordance with the hood manufacturer's instructions.

**Any splashback must be fitted in accordance with the manufacturers instructions.

It is recommended that there is at least 20 mm space between the back cover of the cooker and the wall, for air circulation (**Fig. 9.2**).

Adjacent kitchen furniture must be heat resistant to 90 °C.

Levelling the Cooker

The cooker stands on four levelling legs. These can be adjusted 0 mm to 30 mm by turning the legs clockwise.

It is recommended that you use a spirit level on a shelf in one of the ovens to check for level.

Moving the Cooker

⚠ **On no account try and move the cooker while it is plugged into the electricity supply.**

⚠ **The cooker is very heavy, so take great care.**

⚠ **Do not try to lift or move the cooker by pulling on the door handles.**

We recommend that two people manoeuvre the cooker. Make sure that the floor covering is firmly fixed, or removed, to prevent it being disturbed when moving the cooker around.

Anti-tilting kit

The document bag (**Fig. 9.3**) contains an anti-tilting kit. Loosely attach the antitilting bracket (1) to the wall using the screw (2) and wall plug (3), following the measurements shown in the figure and table below. Adjust the height of the antitilting bracket so that it lines up with the slot on the cooker and tighten the screw. Push the appliance towards the wall making sure that the anti-tilting bracket is inserted into the slot on the rear of the appliance (**Fig. 9.4**).

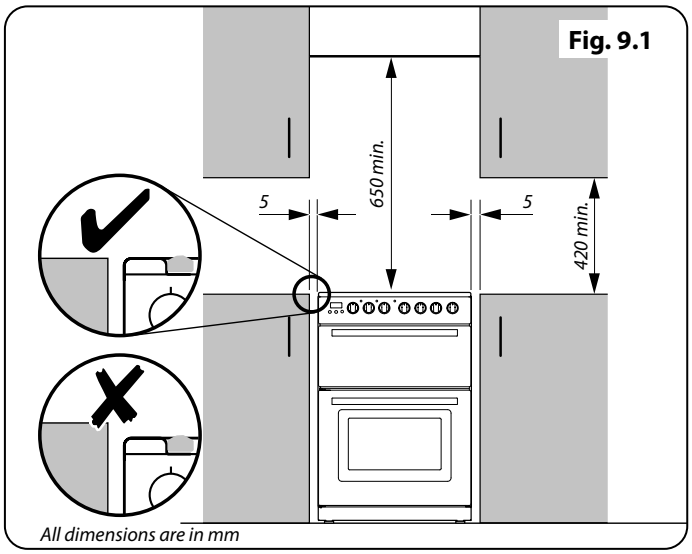

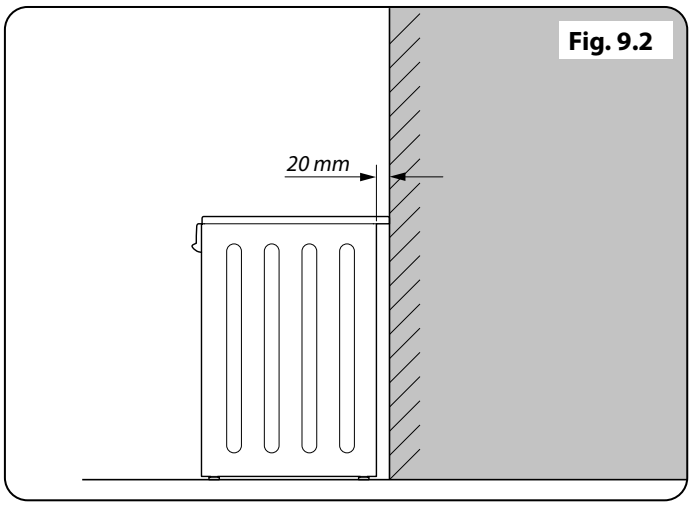

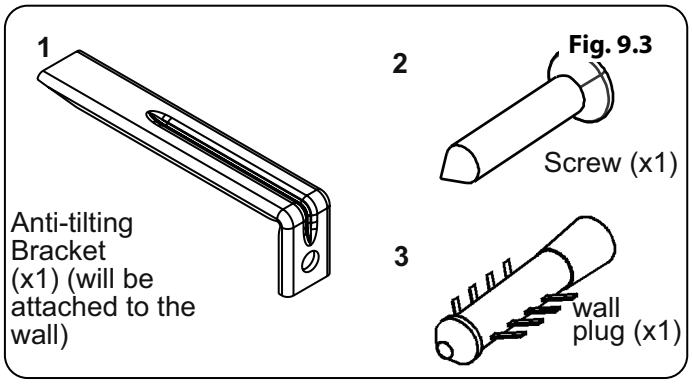

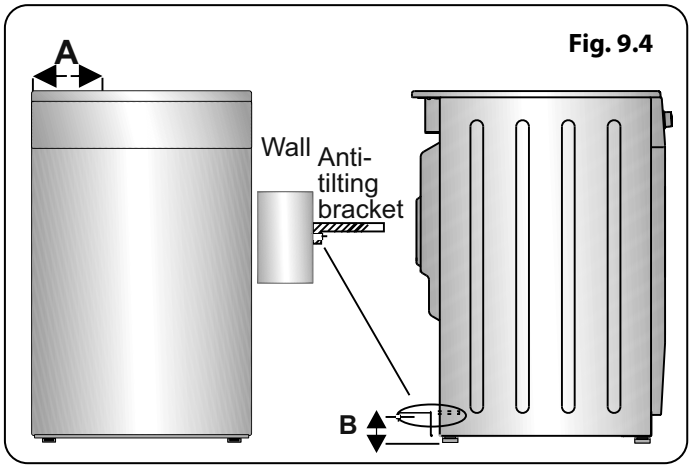

Current Operated Earth Leakage Breakers

The combined use of your cooker and other domestic appliances may cause nuisance tripping, so we recommend that the cooker is protected on an individual RCD (Residual Current Device) or RCBO (Residual Current Breaker with Overload).

If in doubt, please consult a suitably qualified electrician.

Fig. 9.5

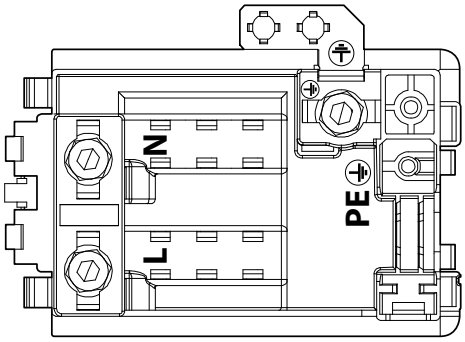

Electrical Connection

All external wiring must comply with the IEE Regulations for the Electrical Equipment of Buildings. Connection to the electrical supply is via a plug and socket.

WARNING: The electrical connection of this appliance should be carried out by an authorised service person or qualified electrician, according to the instructions in this guide and in compliance with the current local regulations.

WARNING: THE APPLIANCE MUST BE EARTHED.

Refer to Fig. 9.5 for electrical connections

- Before connecting the appliance to the power supply, the voltage rating of the appliance (stamped on the appliance identification plate) must be checked for correspondence to the available mains supply voltage, and the mains electric wiring should be capable of handling the appliance's power rating (also indicated on the identification plate).
- During installation, please ensure that isolated cables are used. An incorrect connection could damage your appliance. If the mains cable is damaged and needs to be replaced this should be done by a qualified person.
- Do not use adaptors, multiple sockets and/or extension leads.
- The supply cord should be kept away from hot parts of the appliance and must not be bent or compressed. Otherwise the cord may be damaged, causing a short circuit.
- If the appliance is not connected to the mains with a plug, a all-pole disconnector (with at least 3 mm contact spacing) must be used in order to meet the safety regulations.
- The appliance is designed for a power supply of 220-240 V~. If your supply is different, contact the authorized service personnel or qualified electrician.
- The power cable must be long enough to be connected to the appliance.
- The fused switch must be easily accessible once the appliance has been installed.
- Ensure all connections are adequately tightened.
- Fix the supply cable in the cable clamp and then close the cover.
- The terminal box connection is placed on the terminal box.

IMPORTANT: The wires in the mains lead are coloured in accordance with the following code (Fig. 9.5):

- Green/Yellow (Earth) wire to the terminal marked "PE".

- Brown (Live) wire to the terminal marked "L".
- Blue (Neutral) wire to the terminal marked "N".

The installer should be responsible for selecting the correct cable rating for this appliance.

Adjusting the feet

Your product stands on four adjustable feet (**Fig. 9.6**). For safe operation, it is important that your appliance is correctly balanced. Make sure the appliance is level prior to cooking.

To increase the height of the appliance, turn the feet anti-clockwise. To decrease the height of the appliance, turn the feet clockwise.

It is possible to raise the height of the appliance up to 30 mm by adjusting the feet. The appliance is heavy and we recommend that a minimum of 2 people lift it. Never drag the appliance.

Fig. 9.6

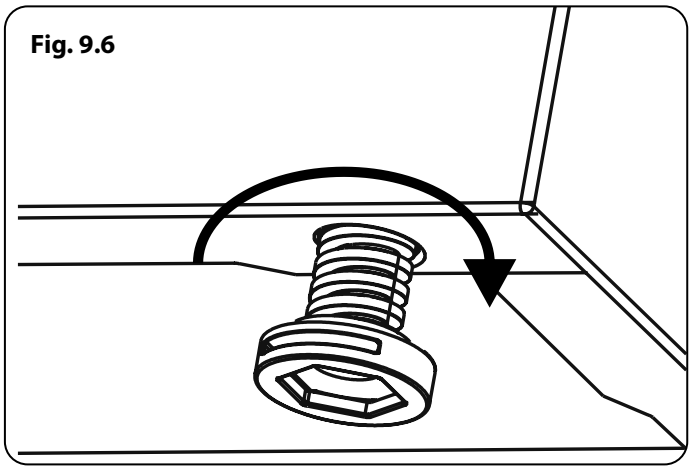

Final Checks

Hob Check

Check each cooking zone in turn. Be sure to use pans of the correct size and material.

Grill Check

Turn on the grill control and check that the grill heats up.

Oven Check

Set the clock as described earlier, and then turn on the ovens. Check the oven fans start to turn and that the ovens heat up.

Customer Care

Installer: Please complete your details in this guide, inform the user how to operate the cooker and hand over the instructions.

Thank you.

10. Circuit Diagrams

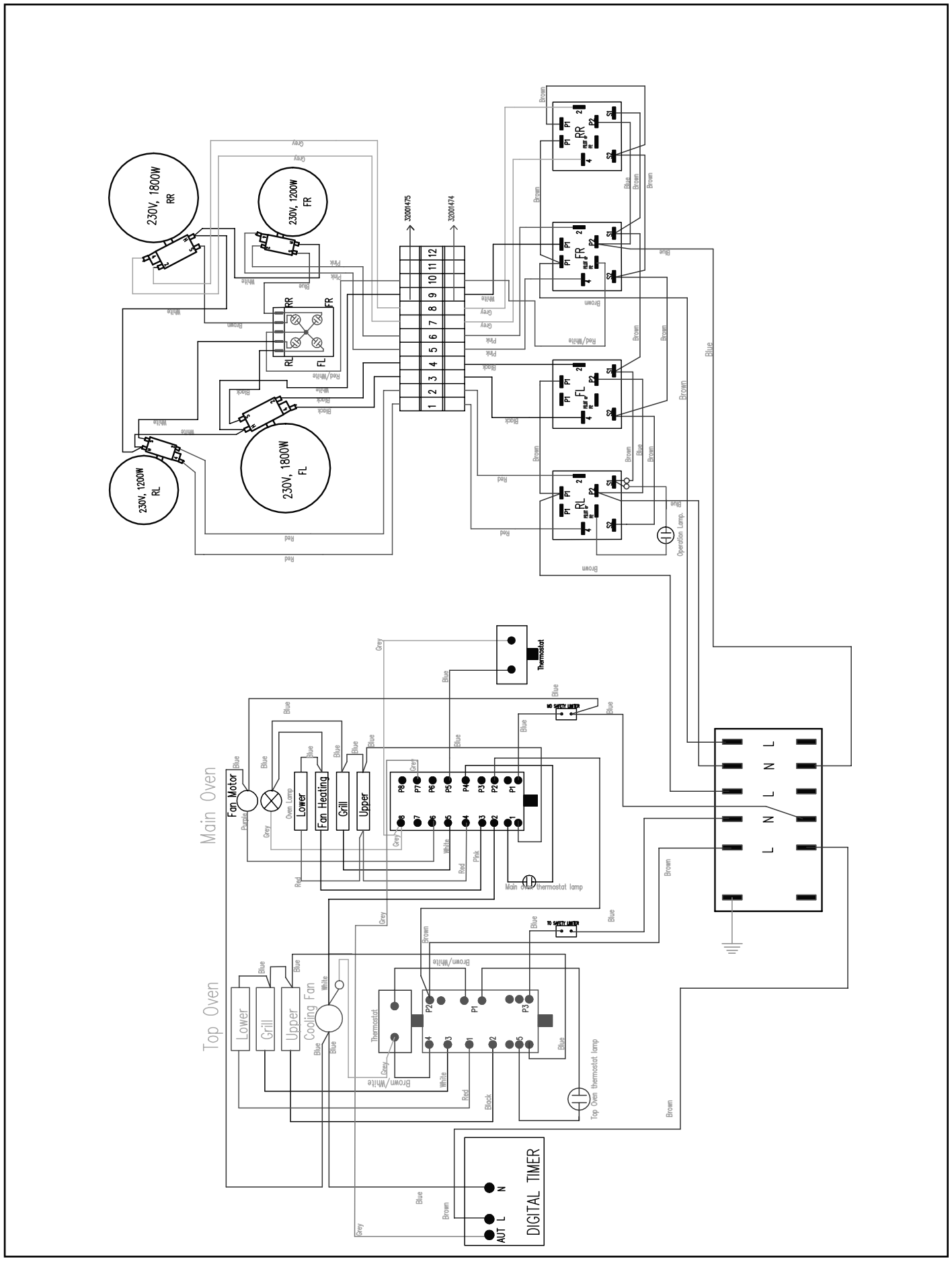

11. Technical Data

INSTALLER: Please leave these instructions with the user.

DATA BADGE LOCATION: Cooker back, serial number repeater badge below oven door opening.

COUNTRY OF DESTINATION: GB, IE.

Connections

Electric	230 / 400 V 50 Hz

Dimensions

Overall height	minimum 895 mm	maximum 925 mm
Overall width	600 mm	
Overall depth	600 mm (to fascia inc. splashback); 610 mm (over hotplate)	
Minimum space above hotplate	650 mm	

Refer to 'Positioning the Cooker'.

Ratings

Trademark		Rangemaster
Models		Classic 60 Ceramic Professional + 60 Ceramic
Hob Type		Electric
Number of Cooking Zones		4
Heating Technology - 1		Radiant
Size - 1	cm	Ø14.5
Energy Consumption - 1	Wh / kg	192
Heating Technology - 2		Radiant
Size - 2	cm	Ø14.5
Energy Consumption - 2	Wh / kg	192
Heating Technology - 3		Radiant
Size - 3	cm	Ø18
Energy Consumption - 3	Wh / kg	192
Heating Technology - 4		Radiant
Size - 4	cm	Ø18
Energy Consumption - 4	Wh / kg	192
Energy Consumption of Hob	Wh / kg	192
This hob complies with EN 60350-2		

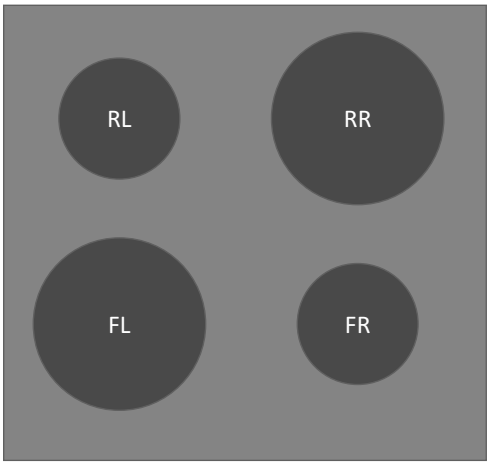

FL Diameter 180mm 1800W

RL Diameter 145mm 1200W

RR Diameter 180mm 1800W

FR Diameter 145mm 1200W

Energy saving tips

1. Use cookware with a flat base.
2. Use the correct size cookware.
3. Use cookware with a lid.
4. Minimise the amount of liquid or fat.
5. When liquid starts boiling, reduce the setting.

Oven Efficiency

	Trademark		Rangemaster
	Models		Classic 60 Ceramic Professional + 60 Ceramic
	Type of Oven		Electric
	Mass	kg	47
	Number of cavities		2
Upper cavity	**Heat source**		Electric
	Volume	Litres	39
	Energy consumption (electricity) - conventional	kWh / cycle	0.75
	Energy consumption (electricity) - forced air convection	kWh / cycle	-
	Energy Efficiency Index - conventional		105.1
	Energy Efficiency Index - forced air convection		-
	Energy Class		A
Lower cavity	**Heat source**		Electric
	Volume	Litres	69
	Energy consumption (electricity) - conventional	kWh / cycle	0.87
	Energy consumption (electricity) - forced air convection	kWh / cycle	0.79
	Energy Efficiency Index - conventional		103.6
	Energy Efficiency Index - forced air convection		94.1
	Energy Class		A
	This oven complies with EN 60350-1		

Additional Information	
Grill	2.3 kW
Oven	2.3 kW

Energy saving tips

1. Cook meals together, if possible.
2. Keep the pre-heating time short.
3. Do not lengthen cooking time.
4. Do not forget to turn the appliance off at the end of cooking.
5. Do not open the oven door during the cooking period.

Maximum total electrical load at 230 V (approximate total including oven lights, oven fan, etc.) 10.6 kW

AGA RANGEmaster

Clarence Street, Royal Leamington Spa,
Warwickshire, CV31 2AD, England.
Tel: +44 (0) 1926 457400 Fax: +44 (0) 1926 450526
E-mail: consumers@rangemaster.co.uk

UK CA

www.rangemaster.co.uk