SIEMENS

iQ500, Free-standing freezer, 186 x 60 cm, Brushed black steel antiFingerprint GS36NAXEP

Innovative noFrost technology freezer, no need to defrost again, with softStart LED lighting and easy access open shelves, groceries couldn't be more simpler to store.

- ✓ noFrost – Never defrost your freezer again.
- ✓ varioZone – easily arrange drawers and glass shelves to bring flexibility to your freezer space.
- ✓ multiAirflow: consistent cooling for longer freshness.
- ✓ Electronic temperature control: set the target temperature clearly and easily.
- ✓ The iceTwister for ice cubes on demand. Easy to refill.

2 x cold accumulator

KS39ZAX00 Connection set cast iron

Energy Efficiency Class: ..... E
Average annual energy consumption in kilowatt hour per year (kWh/a): ..... 234 kWh/annum
Sum of volume of frozen compartments: ..... 242 l
Airborne acoustical noise emissions : ..... 39 dB(A) re 1pW
Airborne acoustical noise emission class: C
Thermometer freeze section: ..... Digital
Light: ..... Yes
Product category: ..... Upright freezer
Built-in / Free-standing: ..... Freestanding
Door panel options: ..... Not possible
Frost free system: ..... Fridge and freezer
Height of the appliance: ..... 1860 mm
Width of the appliance: ..... 600 mm
Dimensions: ..... 650 mm
Dimensions of the packed product (HxWxD): . 1900 x 650 x 750 mm
Weight: ..... 72.1 kg
Gross weight: ..... 74.0 kg
Fuse protection: ..... 10 A
Frequency: ..... 50 Hz
Length electrical supply cord: ..... 230.0 cm
Door opening: ..... Right reversible
Defrost: ..... Automatic
Warning signal / malfunction: ..... Both visual and audible
Door lock: ..... No
Number of drawers/baskets (Stck): 4
Number of freezing flaps (Stck): 0
EAN code: 4242003877661
Brand: ..... Siemens
Product name / Commercial code: GS36NAXEP
Product category: ..... Upright freezer
Included accessories: ..... 2 x cold accumulator

4 242003 877661

SIEMENS

iQ500, Free-standing freezer, 186 x 60 cm, Brushed black steel antiFingerprint GS36NAXEP

Performance and Consumption

Functions

- black inox-antifingerprint doors and cast iron side panels
- Brushed aluminium Vertical door handle
- Bright interior LED freezer light
- Interior design with metal applications

Design features

- NO_FROST_NEU_BL, never have to defrost ever again
- Electronic control (LED display)
- Freezer malfunction warning signal: Optical and acoustic malfunction alarm system
- vitaControl - constant temperature by intelligent sensor - Constant temperature control by intelligent sensor technology
- SuperFreeze function with automatic deactiviation

Food freshness system

- Easy Access open shelving zone - store and access food easily with our conveniently open freezer shelves
- multiAirflow cooling - improves circulation of air around the fridge
- Twist Ice Box removable
- 4 transparent freezer drawers, 2 bigbox

Dimension and installation

- Dimensions: 186 cm H x 60 cm W x 65 cm D

Key features - Fridge section

- Right hinged door, reversible door
- Height adjustable front feet
- Door opening: No side clearance needed at all. Full access to all drawers, door opening angle 90°.
- 220 - 240 V

Key features - Freezer section

- cold accumulator

Country Specific Options

- Based on the results of the standard 24-hour test. Actual consumption depends on usage/position of the appliance.
- To achieve the declared energy consumption, the attached distanceholders have to be used. As a result, the appliance depth increases by about 3.5 cm. The appliance used without the distance holder is fully functional, but has a slightly higher energy consumption.

Included accessories

Design features

Dimension and installation

Additional features

- EU19_EEK_D: E
- Total Volume : 242 l
- Net Fridge Volume : 0 l
- Net Freezer Volume : 242 l
- Freezing capacity 24h : 18 kg
- Annual Energy Consumption: 234 kWh/a
- Climate Class: SN-T
- EU19_Fast freezer facility_D
- Noise Level : 39 dB , EU19_Noise emission class_D: C
- Temperature rise time : EU19_Temperature rise time_D: 9 H

SIEMENS

iQ500, Free-standing freezer, 186 x 60 cm, Brushed black steel antiFingerprint
GS36NAXEP

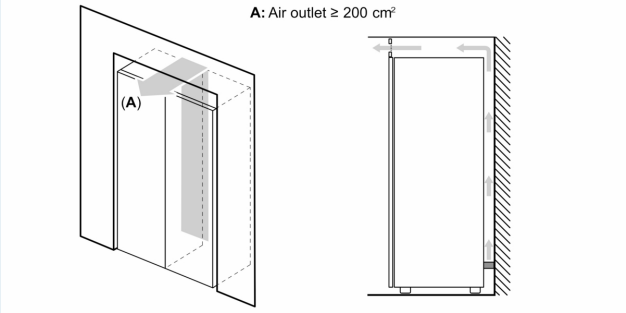

	a	b	c	d	e	f
KSW36, GSD36	187	60	65	58	60	119.5
KSV36, KSF36, GSN36, GSV36	186					
KSV33, GSN33, GSV33	176					
KSV29, GSN29, GSV29	161					
GSV24	146					
GSN51	161	70	78	70	70	142
GSN54	176					
GSN58	191					

a Height
b Width
c Depth with closed door w/o handle and w/o distance part
d Depth of cabinet w/o distance part
e Width with open door w/o handle
f Depth with open door w/o handle w/o distance part

measurements in cm

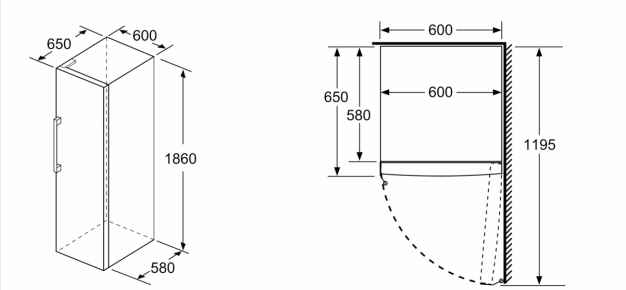

measurements in mm

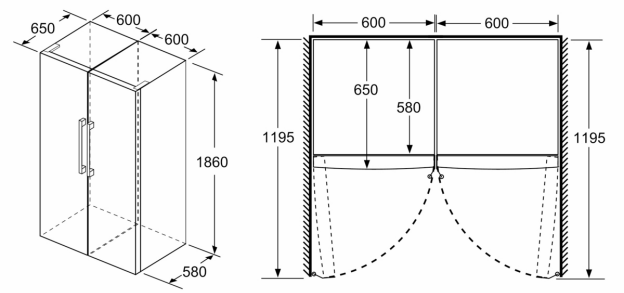

measurements in mm